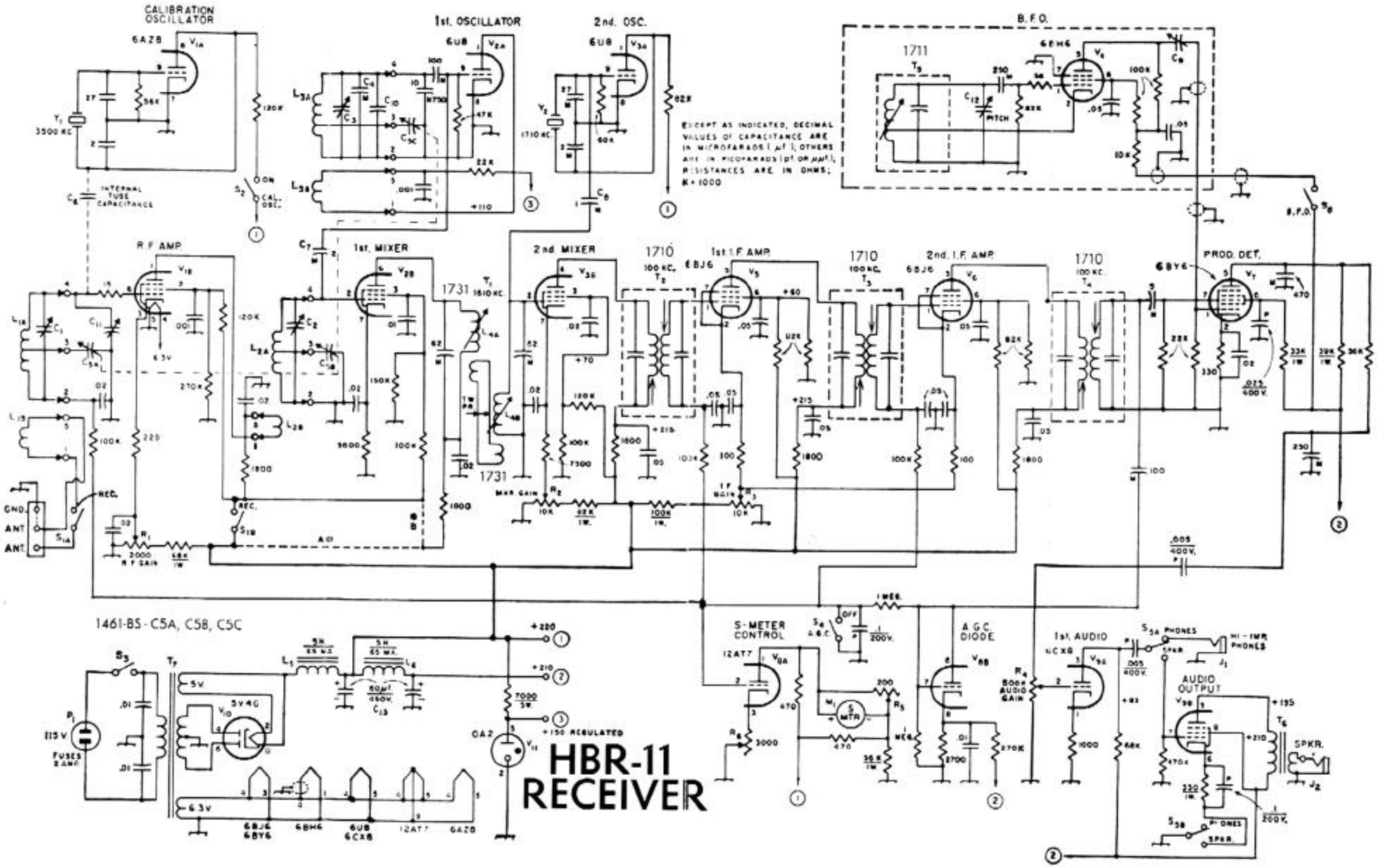

HBR-11 RECEIVER